# A Biochip for Rapid Identification of Pathogens

# *The problem*

- **Most rapid sensing is based on antibodies.**
- Pathogens often evade antibody detection by changing their outer coat.
- The outer coat of pathogens can also be bio-engineered to have a composition that current antibodies will not recognize.
- The problem is how to develop an ***"evasion-proof"*** detection system.

# *The solution:* Use a type of biorecognition that is evasion-proof

- The recognition system should be highly pathogen specific.
- A secondary confirmation should be incorporated to eliminate false positives.
- The system should be simple.
- The system should be implementable with existing technology

# Strategy: Focus on pathogen receptors that cannot be mutated without loss of virulence

- Pathogen attachment to target cells occurs through the interaction of pathogen receptors with the host's cell surface carbohydrates or proteins. *If the receptor for the host cell is mutated, the pathogen becomes avirulent.*
- Pathogens scavenge essential nutrients using receptors for these nutrients (iron, vitamins, etc.). *If receptors for essential nutrients are mutated, the pathogen cannot survive.*
- Pathogens sense their hosts and detect the number of their "colleagues" (quorum sensing) via cell surface receptors. *If quorum sensing fails, the pathogen becomes avirulent.*

**Even a well educated terrorist cannot mutate these receptors without loss of pathogen viability**

# Host-Pathogen Interactions

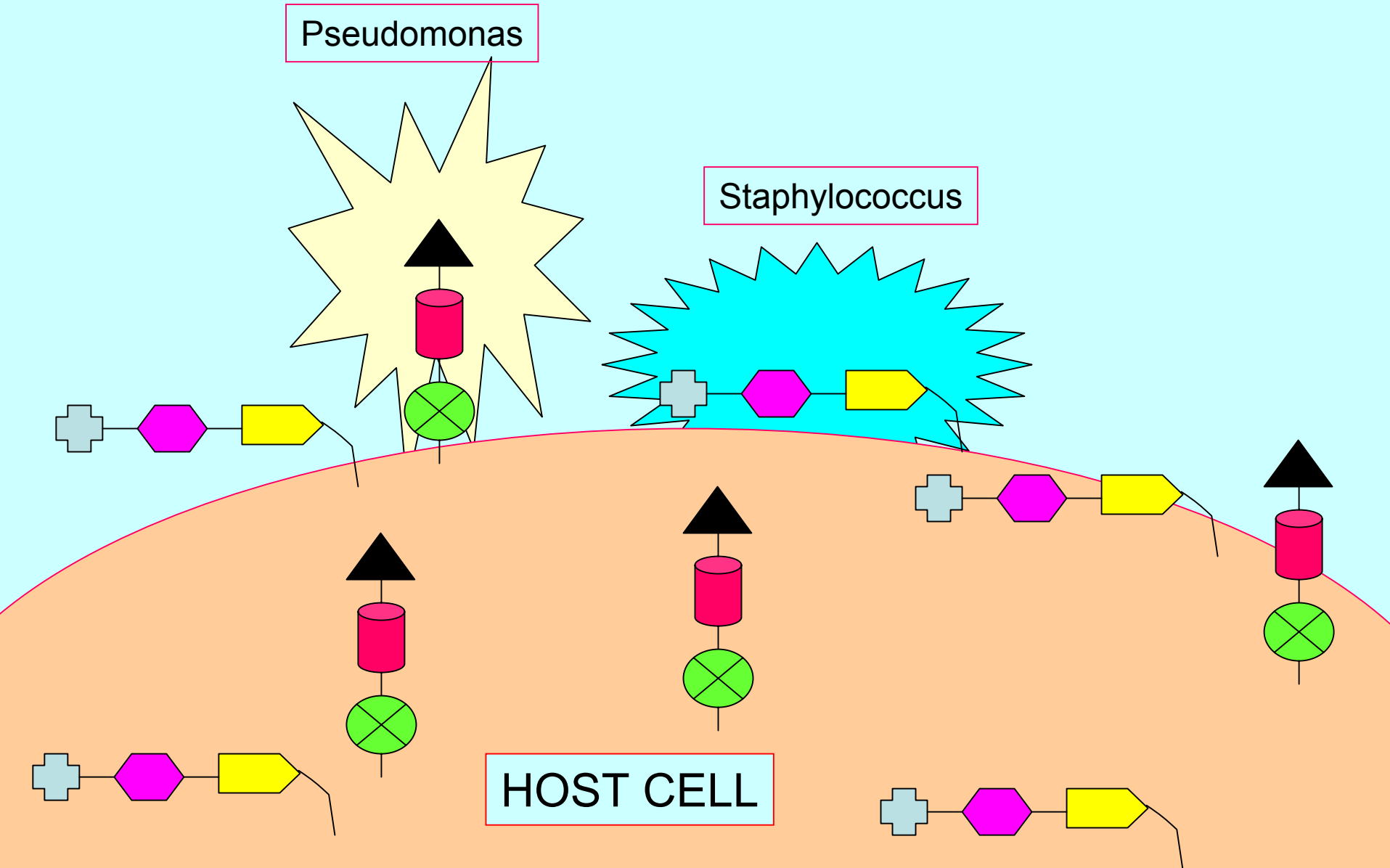

# Siderophores Mediate Iron Uptake by Microbes

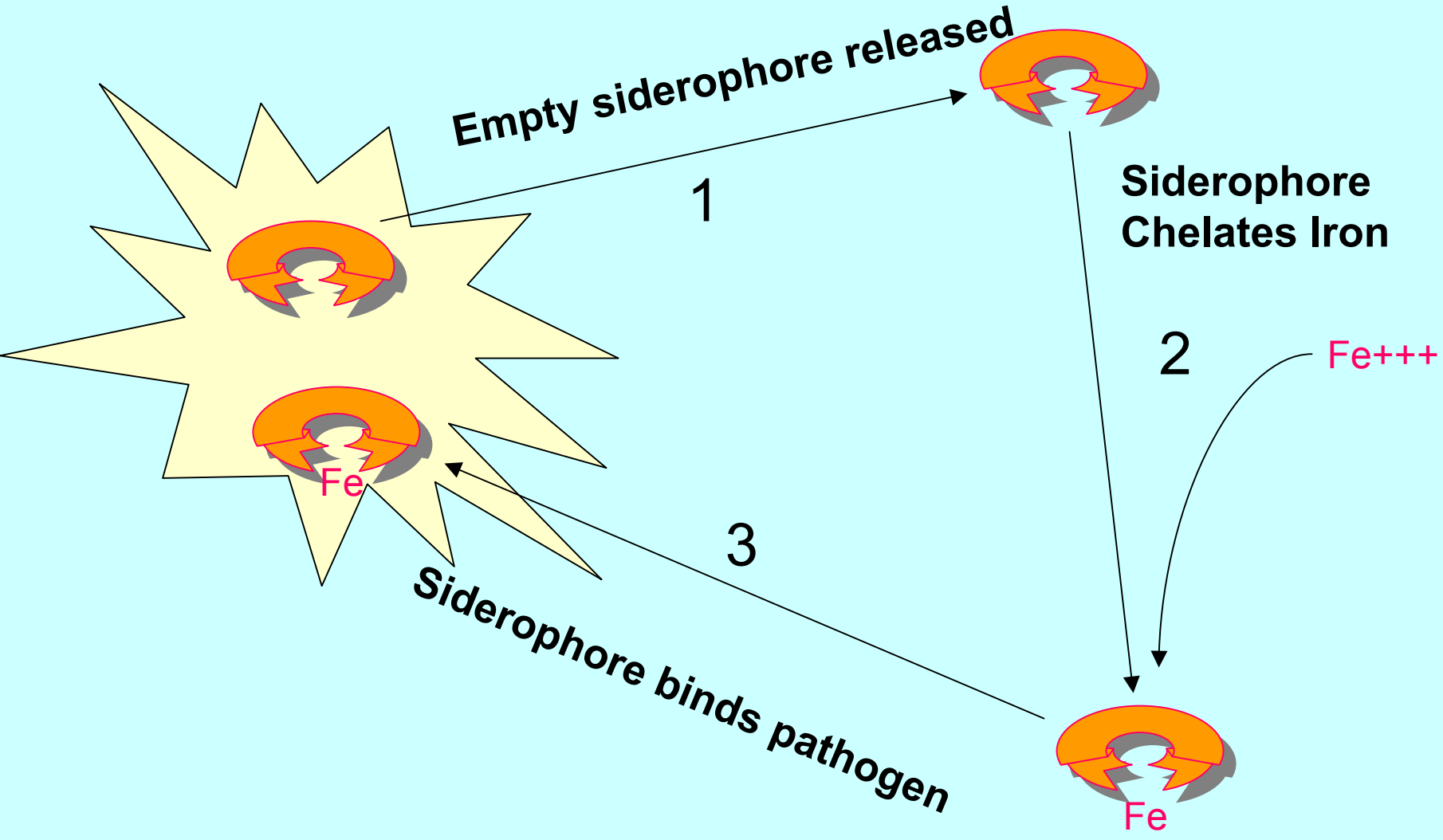

# Siderophore Receptors

- Siderophores receptors
  - *Receptors exist only on microorganisms*
  - High affinity binding (subnanomolar range)
  - High number of surface receptors
  - Pathogen cannot survive without them
  - Specificity and multiplicity

# Oligosaccharide/Siderophore Biochip

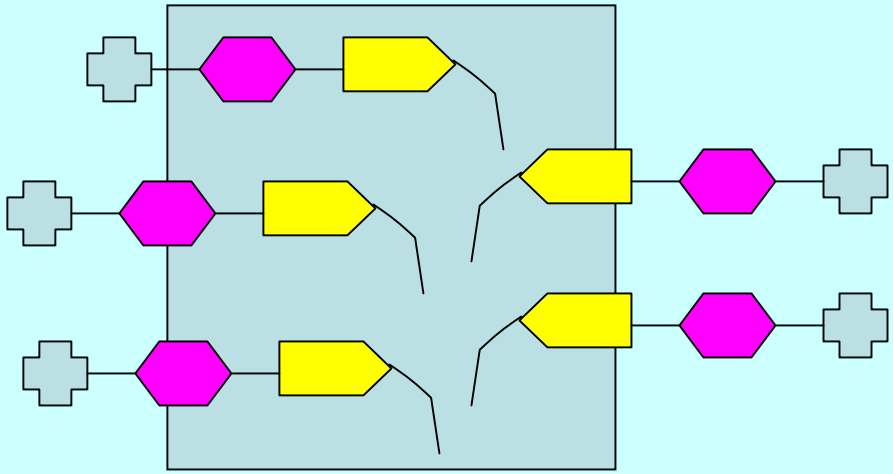

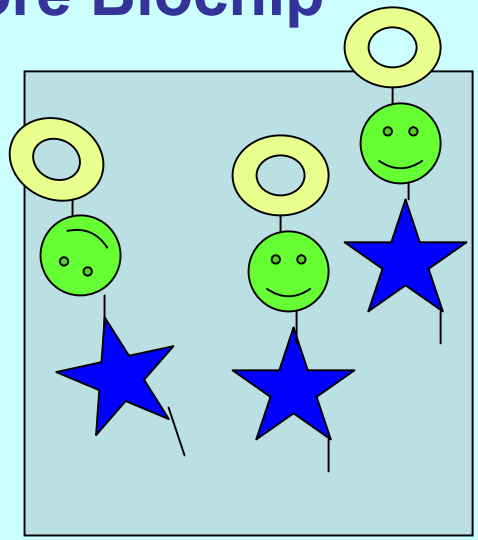

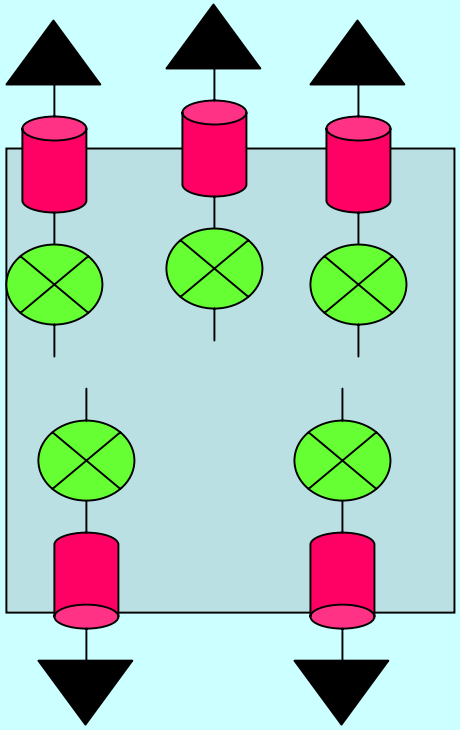

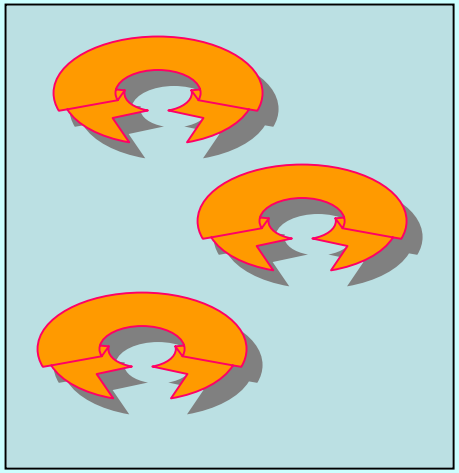

# Oligosaccharide/Siderophore Biochip

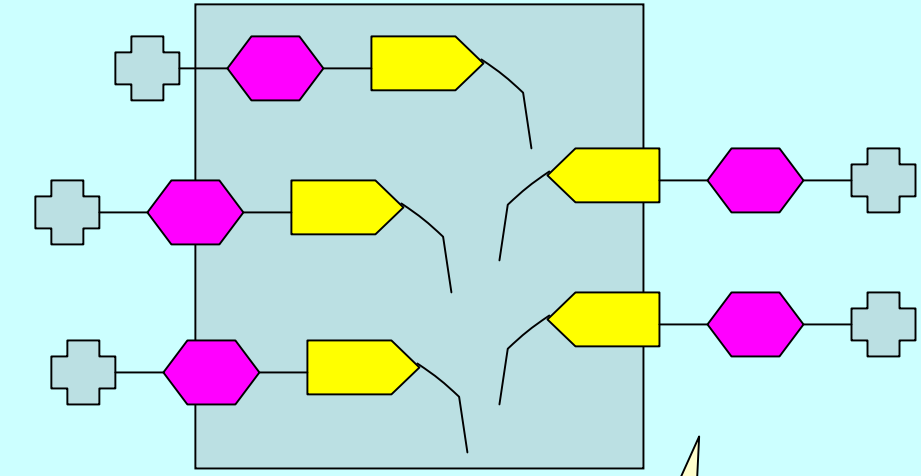

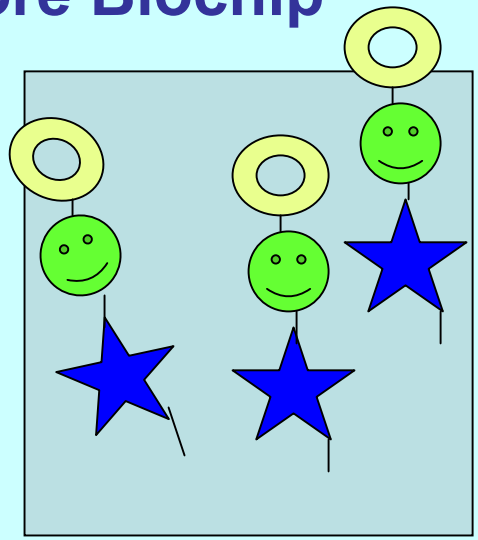

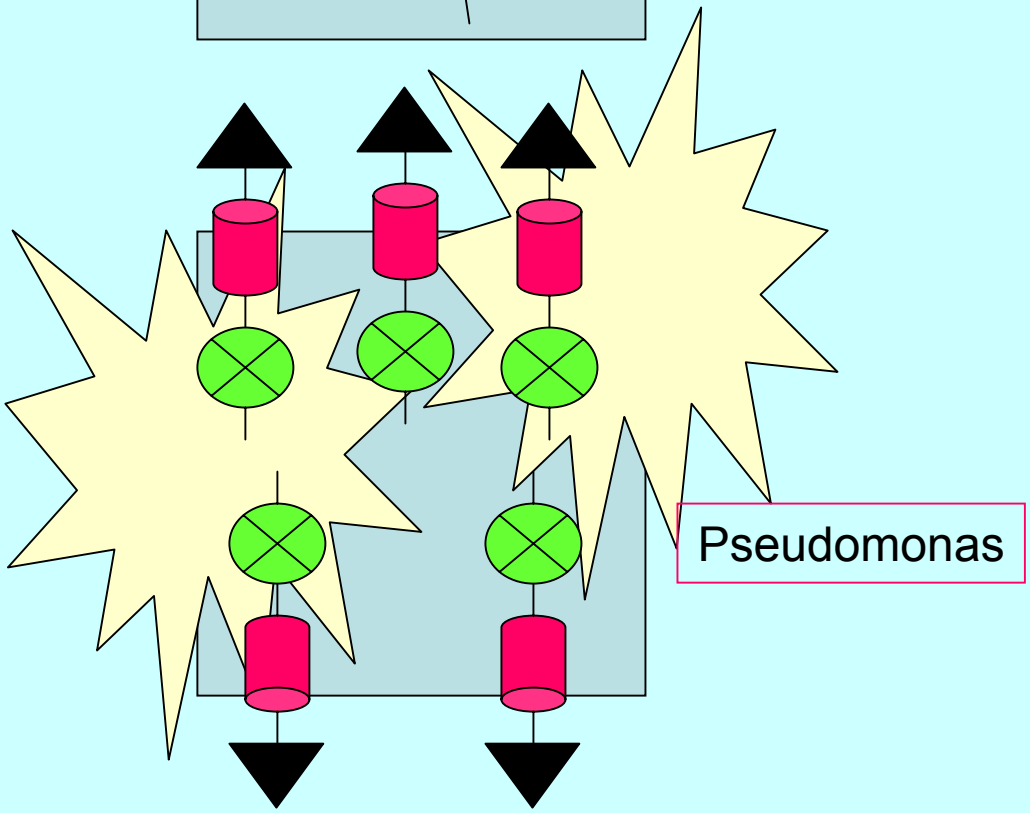


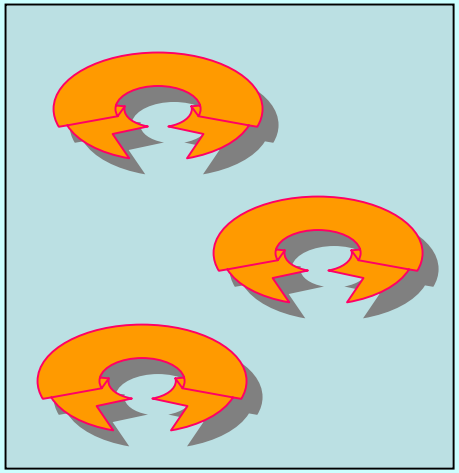

Data slides deleted

# Bacterial Pathogens

- Yersinia
- Klebsiella
- Providencia
- Erwinia
- Enterobacter
- Salmonella
- Serratia
- Aerobacter
- Escherichia
- Pseudomonas
- Shigella
- Vibrio
- Aeromonas
- Streptococcus
- Staphylococcus
- Micrococcus
- Moraxella
- Bacillus
- Clostridium
- Corynebacterium
- Eberthella
- Francisella

- Haemophilus
- Bacteroides
- Listeria
- Erysipelothrix
- Acinetobacter
- Brucella
- Pasteurella
- Vibrio
- Flavobacterium
- Fusobacterium
- Streptobacillus
- Calymmatobacterium
- Legionella
- Treponema
- Borrelia
- Leptospira
- Actinomyces
- Nocardia
- Rickettsia
- Micrococcus
- Mycobacterium
- Neisseria

Campylobacter

# Fungal Diseases

- ringworm
- histoplasmosis
- blastomycosis
- aspergillosis
- cryptococcosis
- sporotrichosis
- coccidioidomycosis
- paracoccidio-idomycosis
- mucormycosis
- chromoblastomycosis
- candidiasis
- dermatophytosis
- protothecosis
- fusariosis
- pityriasis
- mycetoma
- Paracoccidioidomycosis
- phaeohyphomycosis
- pseudallescheriasis
- sporotrichosis
- trichosporosis
- pneumocystis

# Parasitic Diseases

- Taenia
- Hymenolepsis
- Diphyllobothrium
- Echinococcus
- Fasciolopsis
- Heterophyes
- Metagonimus
- Clonorchis
- Fasciola
- Paragonimus
- Schitosoma
- Enterobius
- Trichuris
- Ascaris
- Ancylostoma
- Necator
- Wuchereria
- Brugi
- Loa Onchocerca
- Dracunculus
- Naegleria
- Acanthamoeba
- Plasmodium
- Trypanosoma
- Leishmania
- Toxoplasma
- Entamoeba
- Giardia
- Isospora
- Cryptosporidium
- Enterocytozoa
- Strongyloides
- Trichinella

# Viral Diseases

- papilloma viruses
- parvoviruses
- adenoviruses
- herpesviruses
- vaccinia virus
- arenaviruses
- coronaviruses
- rhinoviruses
- respiratory syncytial viruses
- influenza viruses
- picornaviruses
- paramyxoviruses
- reoviruses
- retroviruses
- rhabdoviruses
- HIV

# Applications of Evasion-Proof Biochip

- Serum analysis
- Urine analysis
- Water supply analysis
- Air supply analysis
- Food analysis
- Agriculture product analysis
- Shipping container analysis
- Mail analysis
- Platelet rich plasma analysis

# Niche for Ligand-Based Biochip

- Since most current DNA-based detection methods require considerable time between collection and identification of a pathogen, our ligand-based biochip technology should find applications where speed of diagnosis is critical:
  - When contagious pathogen release occurs at a large gathering that will quickly disperse to numerous destinations (Super Bowl, American Cancer Society meetings, Chicago O'Hare airport, etc.)
  - When death occurs quickly following pathogen exposure.
  - When fear of exposure to a presumed bioterror substance could lead to mass panic of the public if an immediate diagnosis is not made.
- The cost of reproducing many copies of a chip-based detection system should be small compared to the cost of the instrumentation used in DNA analyses.
- A biochip detection device can be miniaturized so that it might fit easily into air duct systems of buildings, commercial airplanes, doctors offices, water lines, or in a user's hand for mobile screening of containers at shipyards or border crossings, or analyses of swabs from luggage at airport security checkpoints.

# Acknowledgements


- Collaborators
  - Fred Regnier
  - Ron Reifenberger
  - Yeong Kim
  - Graham Cooks
  - Scott McClucky

PURDUE UNIVERSITY

**Center for Sensing Science and Technology**